TecnoBrick®
by TecnoIndustries®

ECONOMY BRICK

Brochure

USA (281) 973.0234 Ext. 117| MEX (81) 8664.2140 Ext. 117 | www.tecnobrick.com

ECONOMY

Provides a conventional smooth finish that creates a timeless and classic look for any exterior.

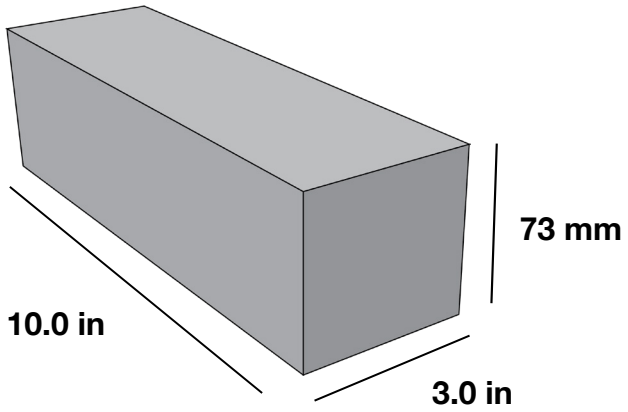

Benefits

* Color can be modified and customized to fit any project's design
* Shape, joints and color guarenteed to withstand any weather conditions and UV light
* Manufactured with the elegenace, sparkle and durability of marble

Technical Information

Pallet: 488 units
Unit Weight: 6.834 lbs/unit
PSI Value: 3500 lbs/in^2

Absorption: 6%
Units per ft^2: 3.9 units with 0.5 in joint

TecnoBrick®

ECONOMY BRICK

TecnoBrick®

Available Colors

Artic White Plain *401*

Old Town *413 AB*

Hacienda Light Antique *414 A*

Sonora *415 A*

El Dorado *416 PV*

Executive Antigua *419 T*

Charcoal Gray *422 A*

Cypress Wood *437 P*

Cambridge *442 D*

Massachusetts *450*

Timberwood Antique *452 A*

Cimarron *452 C*

Merlot *452 D*

Sand Stone Antique *471 A*

Dessert Time *477 DT*

New Mexico *477 NM*

ECONOMY BRICK

TecnoBrick®

Available Colors

Executive Cypress *477 P*

White Mist Antique *481 A*

Buff *461*

Renaissance *4735 TPB*

471 A

ECONOMY BRICK

TecnoBrick®

413 AB

422 D

ECONOMY BRICK

TecnoBrick®

477 P

452 D